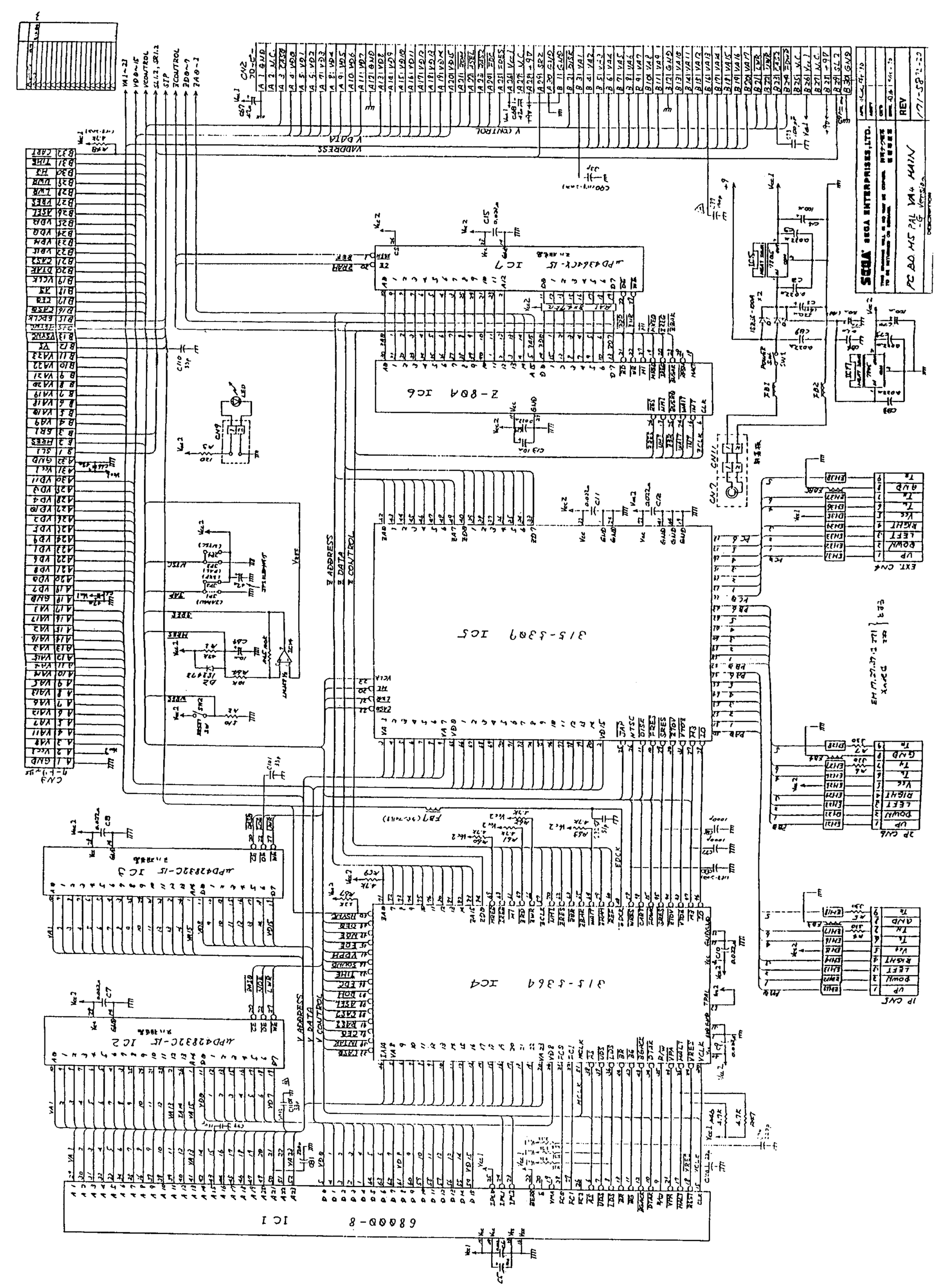
SEGA ENTERPRISES, LTD.
PC BD MS PAL VA4 MAIN
REV
Z-80A IC6
μPD43464C-15 IC7
315-5369 IC5
315-5364 IC4
μPD42832C-15 IC2
μPD42832C-15 IC3
68000-8 IC1
V ADDRESS
V DATA
V CONTROL
Z ADDRESS
Z DATA
Z CONTROL
CN2
CN3
CN4
CN5
CN6
CN7
CN8
CN9
CN11
EXT. CN4
2P CN6
1P CN5

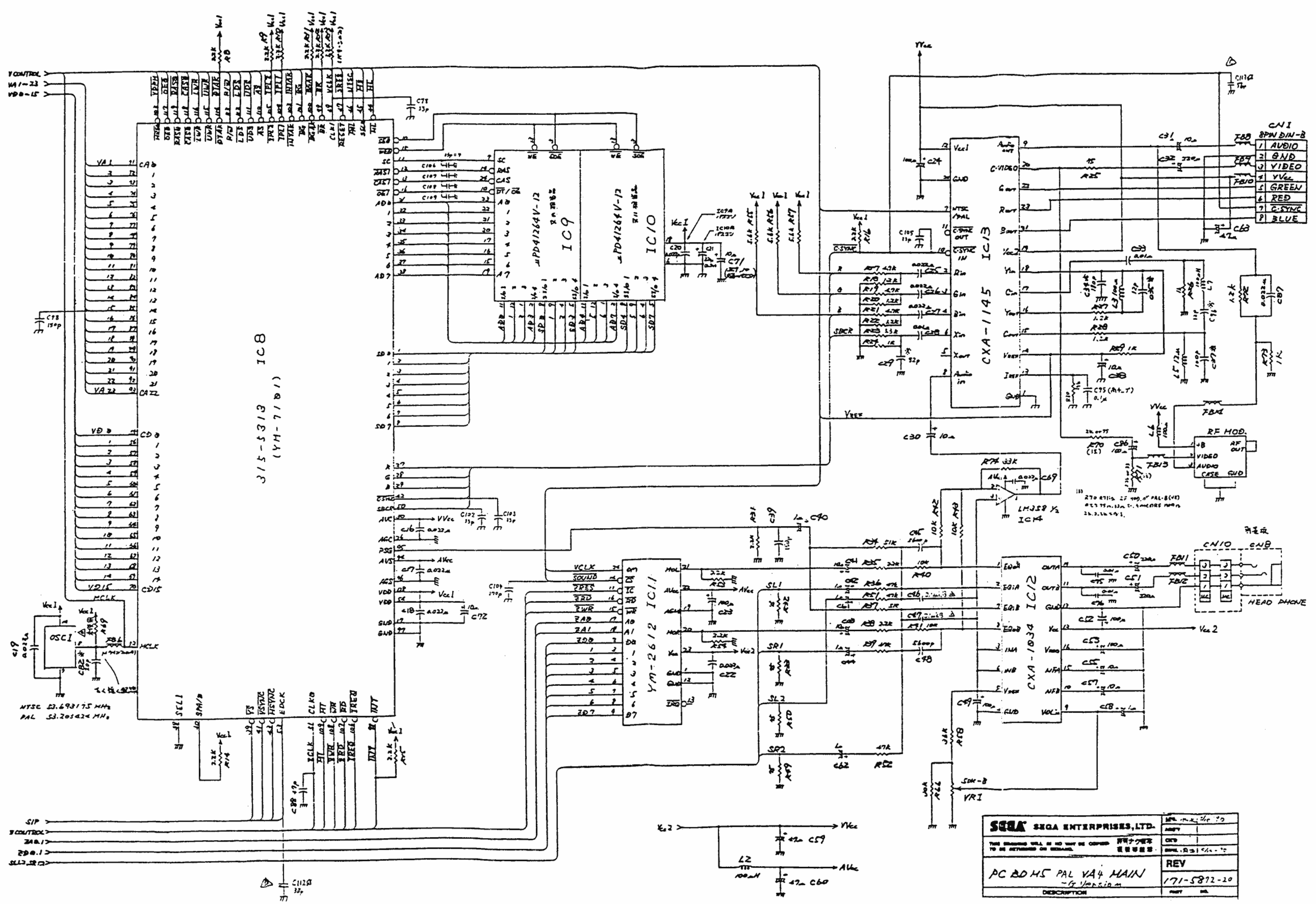
IC8
315-5313
(YM-7101)
IC9
μPD41264V-12
IC10
μPD41264V-12
IC13
CXA-1145
IC12
CXA-1034
IC11
YM-2612
IC14
LM358
CN1
8PIN DIN-8
AUDIO
GND
VIDEO
VVcc
GREEN
RED
C-SYNC
BLUE
CN10
CN8
HEAD PHONE
RF MOD.
OSC1
NTSC 53.693175 MHz
PAL 53.203424 MHz
VR1
SEGA ENTERPRISES, LTD.
PC BOHS PAL VA4 MAIN
REV
171-5872-20